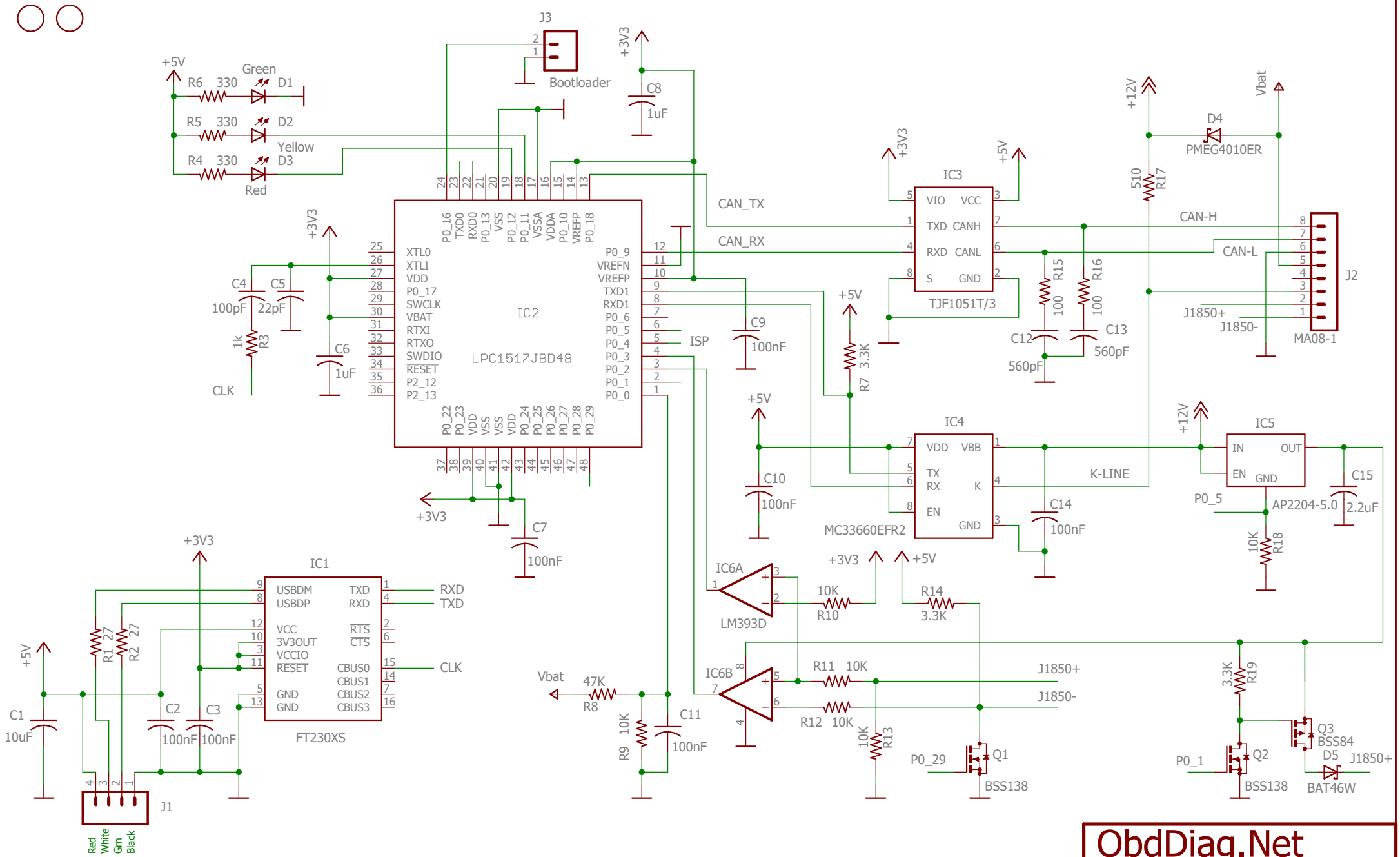

ObdDiag.Net

AllProUsb

5/13/2016 11:57 AM

1/1